STRAIGHT EDGE GATE CUTTING PIN - Ø12MM / 1 GATE

ALMO

CATALOGUE NUMBER: SE-P12.60.1

Trouble free cutting of edge gate inside the mould during mould opening.

Large edge gate to improve mould fill and packing.

Reduces injection pressure and moulding cycle.

Economical interchangeable cutting insert.

Manufactured from M2 64 HRC.

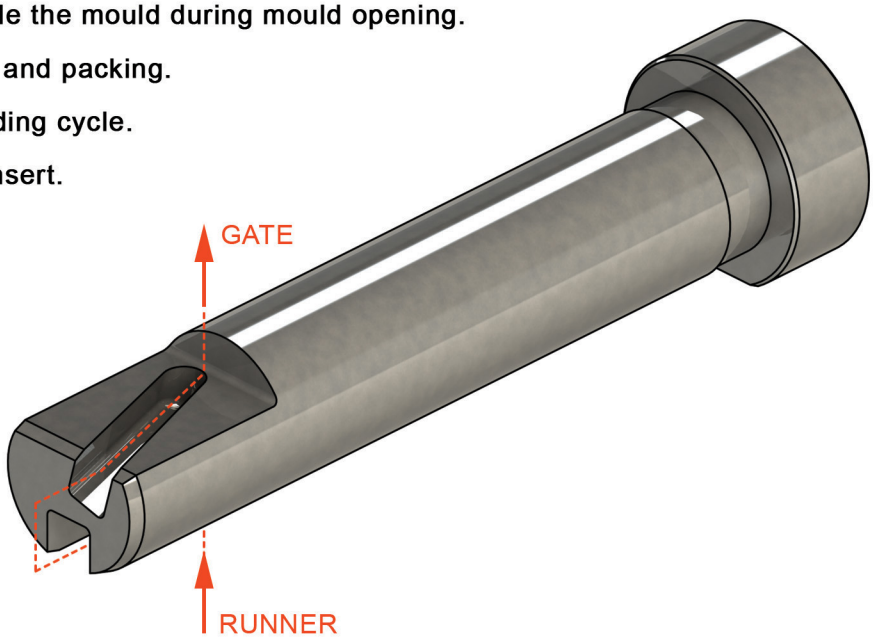

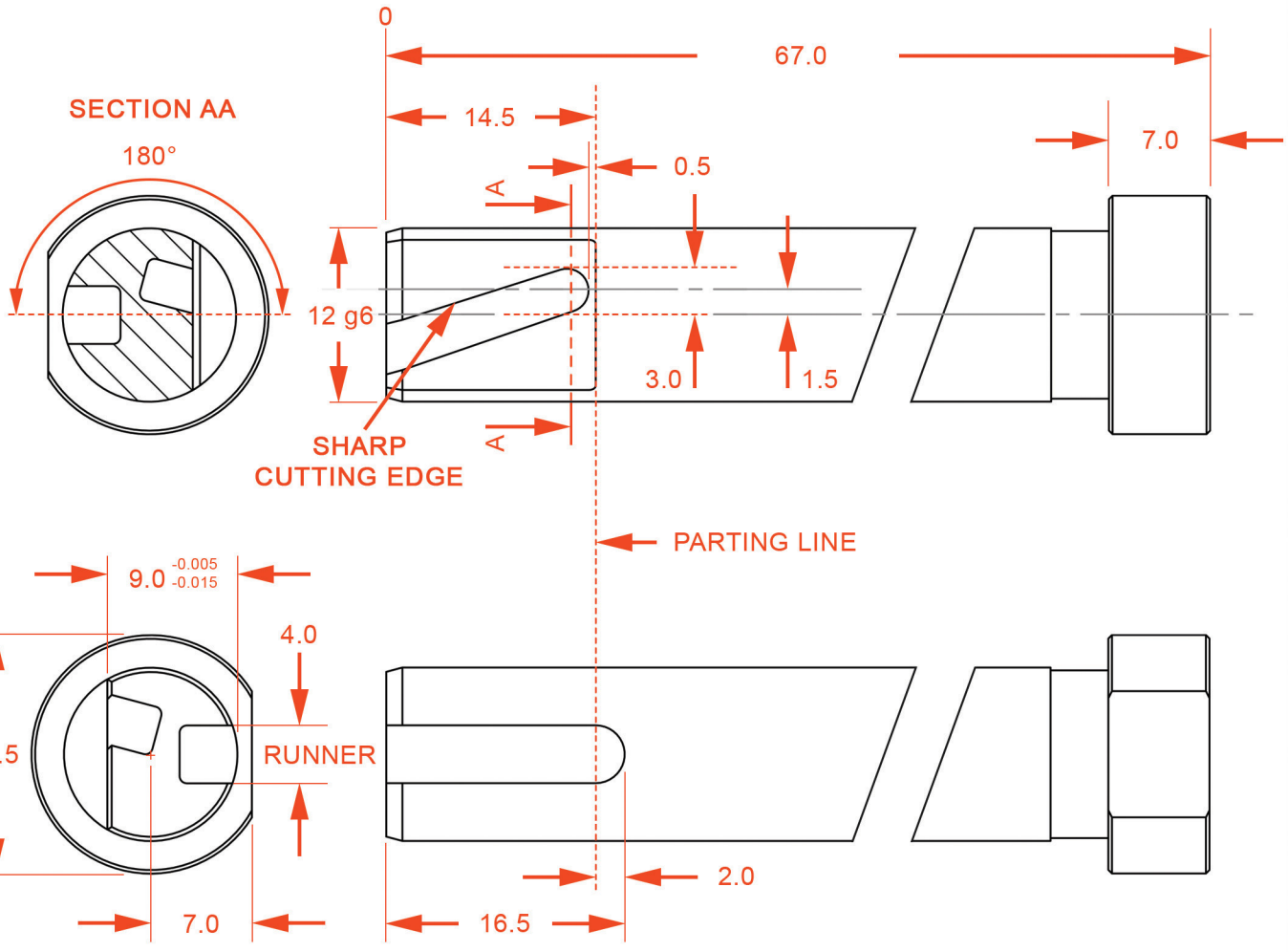

*Ejector plate must be held back during mould opening time.

PATENTED PRODUCT